ENGINE, AIR INTAKE SYSTEM - Z26S4D92AN/AH/BN/BH (C750253)

2026 RZR - RZR PRO S4 ULTIMATE (R01) - Z26S4D92AN/AH/BN/BH

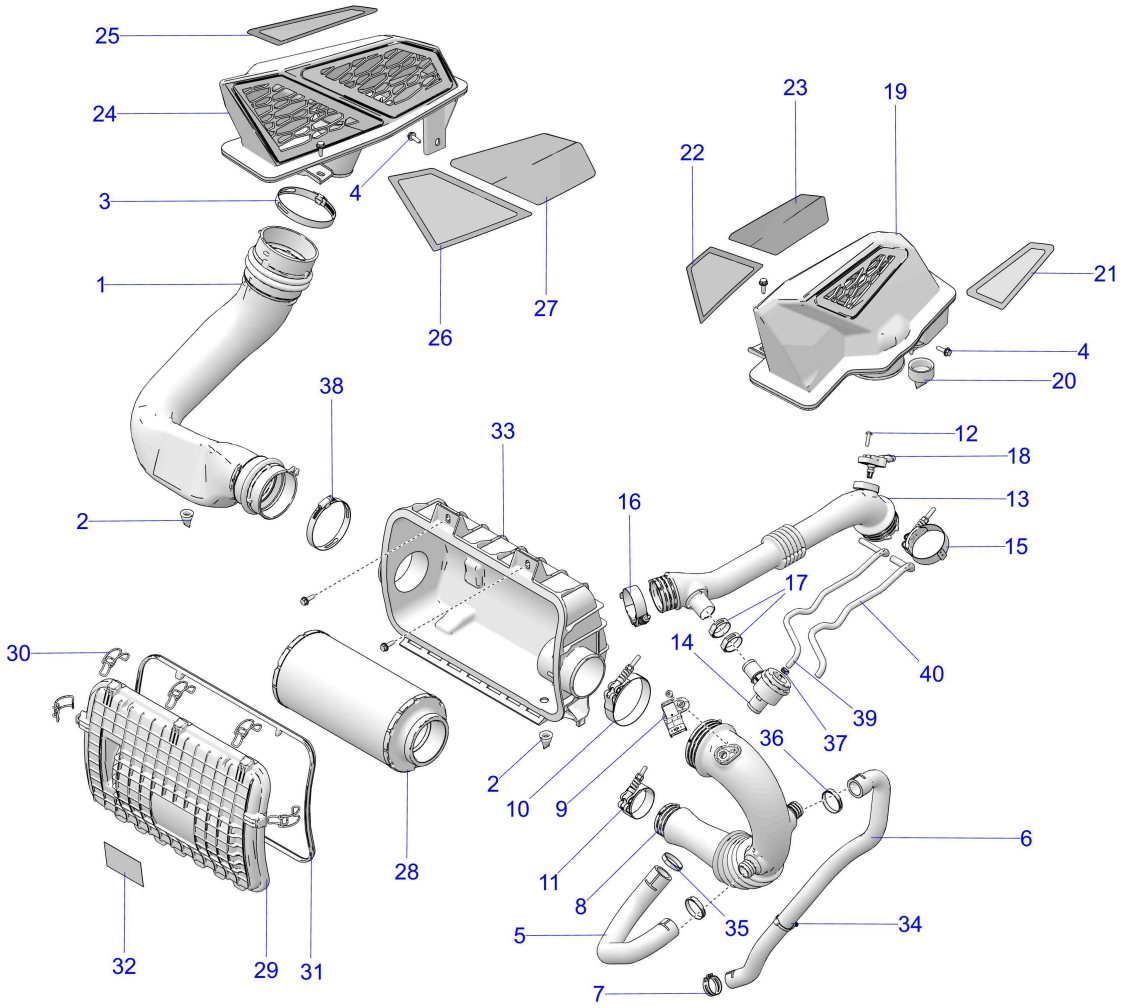

© 2023 Polaris Industries Inc.

C750253

Reference #	*Part#*	*Description*	*Quantity*
1	1241537	ASM-DUCT,AIRBOX,IN [INCL. QTY 1 OF 2]	1
2	5414472	PLUG-DRAIN	2
3	7081969	CLAMP-HOSE SLOTTED,92-100 DIA	1
4	7518529	SCR-M6X1.0X20,HXHD,FLG,TDFM,BK	6
5	5415474	HOSE-VENT,BOV	1
6	5416756	HOSE-VENT,ENG	1
7	7080842	SPRINGBAND-CLAMP 29/12,BLK	1
8	1241308	ASM-DUCT,INTAKE AIR [INCL. 9-12]	1
9	2411528	SENSOR-TMAP DSS3-TF	1
10	7082093	CLAMP-HOSE T-BOLT,87.3 DIA	1
11	7082485	CLAMP-HOSE T-BOLT,56 DIA	1
12	7519952	SCREW-PLASTITE,5.0MMX20-PN-T25	2
13	1244623	ASM-DUCT,CHARGE AIR [INCL. QTY 1 OR 12 & 14-18]	1
14	3024035	VALVE-DUMP,TURBO	1
15	7082091	CLAMP-HOSE T-BOLT,66.3 DIA	1
16	7082896	CLAMP-HOSE T-BOLT,56 DIA	1
17	7082095	CLAMP-OETIKER,16704932-32	2
18	2413095	SENSOR-TMAP,3BAR	1

19	2637232	ASM-BEZEL,INTAKE,LH [INCL. 20-23]	1
20	5417149	BOOT-PURGE VALVE,AIR BOX	1
21	5456087	SCREEN-INTAKE,OUTER,LH	1
22	5456089	SCREEN-INTAKE,INNER,FRONT,LH	1
23	5456091	SCREEN-INTAKE,INNER,REAR,LH	1
24	2637233	ASM-BEZEL,INTAKE,RH [INCL. 25-27]	1
25	5456088	SCREEN-INTAKE,OUTER,RH	1
26	5456090	SCREEN-INTAKE,INNER,FRONT,RH	1
27	5456092	SCREEN-INTAKE,INNER,REAR,RH	1
28	1241084	ASM-FILTER	1
28	2882234	K-FILTER,AIR,ULTRA,PERF,RZN HD Air Filter Kit	1
29	1241468	ASM-AIRBOX COVER [INCL. 30-32]	1
30	7082596	ASM-AIRBOX CLIP	5
31	5814549	SEAL-AIRBOX	1
32	7182652	DECAL-CAUT.AIR BOX	1
33	5457123	AIRBOX	1
34	7081496	CLIP FIR-TREE,DIA6-33MM	1
35	7082107	CLAMP-OETIKER, 16704965-36.1	1
36	7082108	CLAMP-OETIKER,16702031-38.5	2
37	7082109	CLAMP-OETIKER,16700005-10.0	1
38	7082805	CLAMP-HOSE SLOTTED,84-96 DIA	1
39	1241347	ASM-HOSE REFERENCE,48CM	1
39	8450153-48	LINE-BOOST,3/16 ID,25CM	1
40	5522158-45	WRAP-FLEXFIT 2115,8MM,45CM	1

Copyright 1996-2026 Polaris Industries U.S.A All rights reserved.